

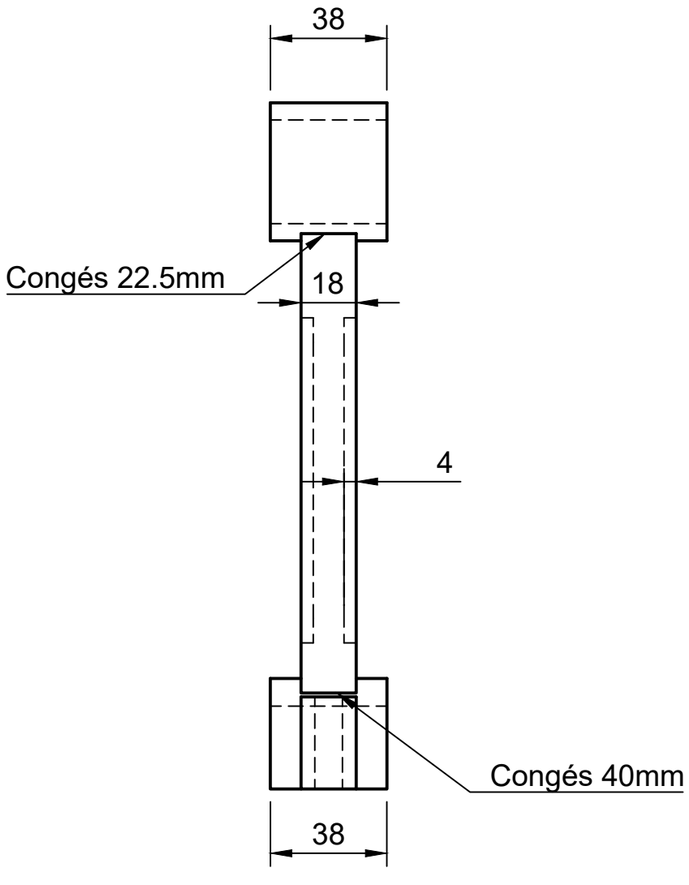

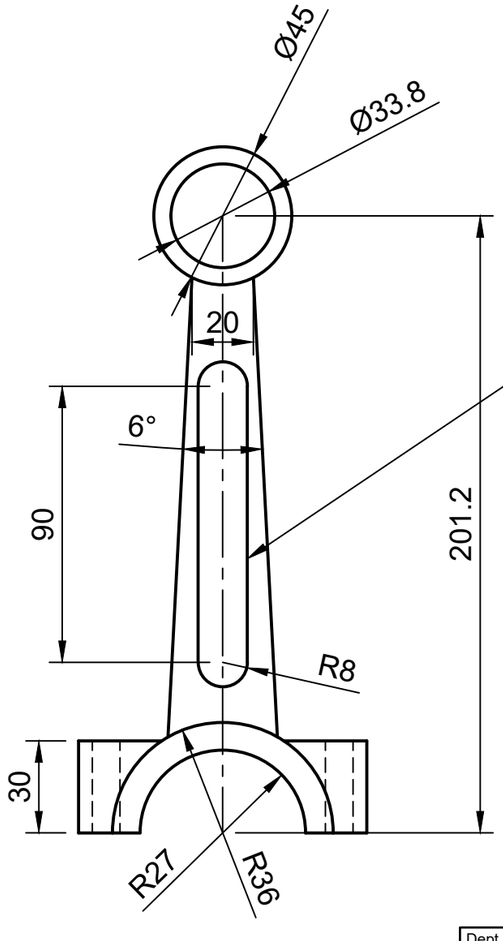

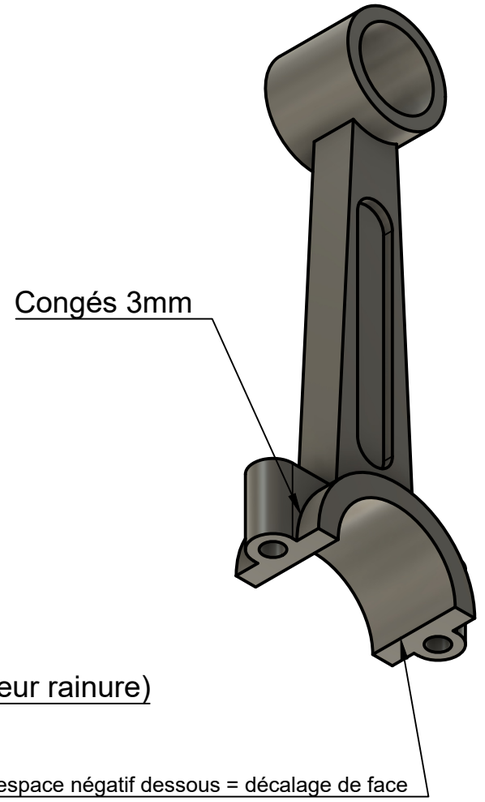

Congés 1mm
(intérieur + extérieur rainure)

L'espace négatif dessous = décalage de face

Dept.	Technical reference	Created by	Approved by
		Yannis Lamoussiere 09/12/2024	
		Document type	Document status
		Title: Bielle	DWG No.
			Rev. / Date of issue / Sheet: 1/1