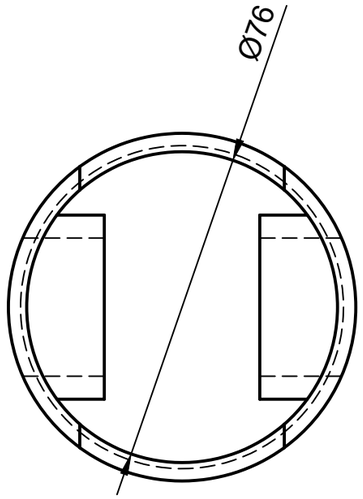

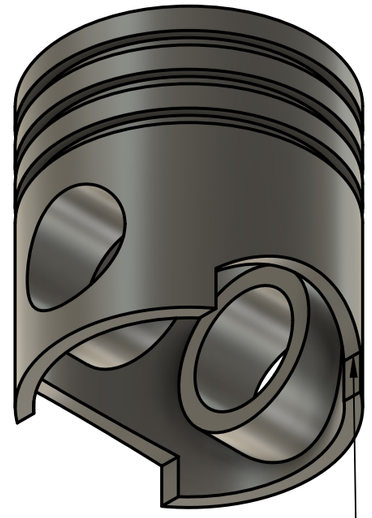

Congés 10mm
(pour les 4 arêtes similaires)

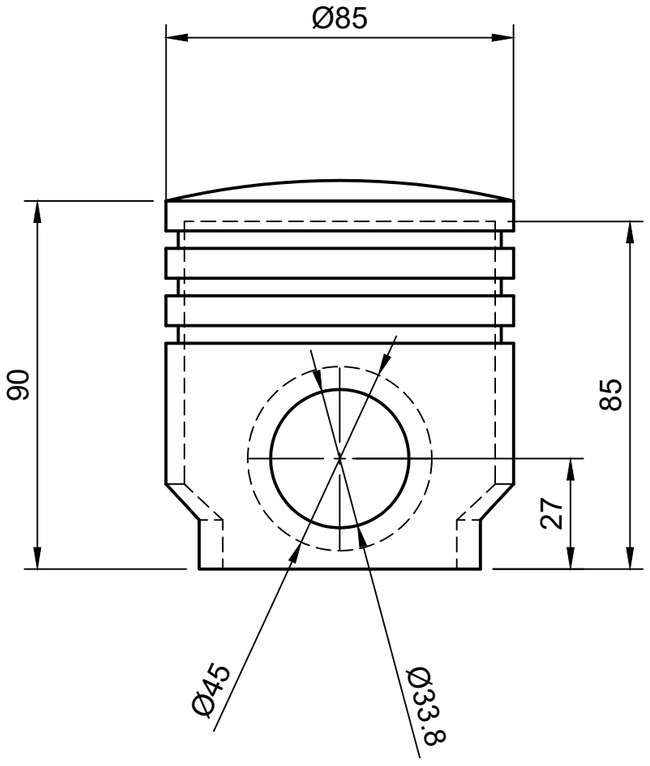

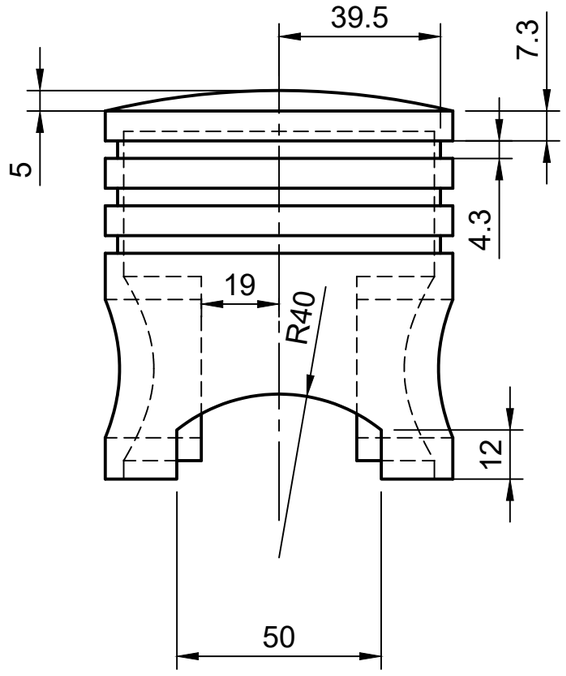

Dept.	Technical reference	Created by Yannis Lamoussiere 09/12/2024	Approved by
		Document type	Document status
		Title Piston	DWG No.
			Rev. / Date of issue / Sheet 1/1