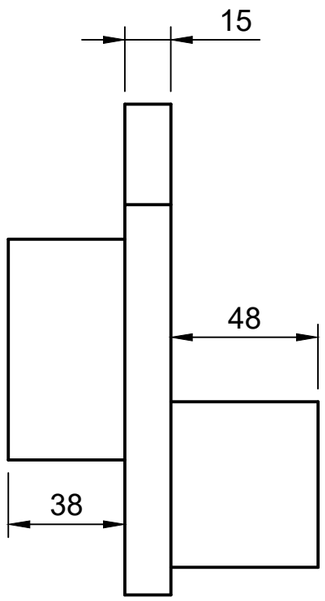

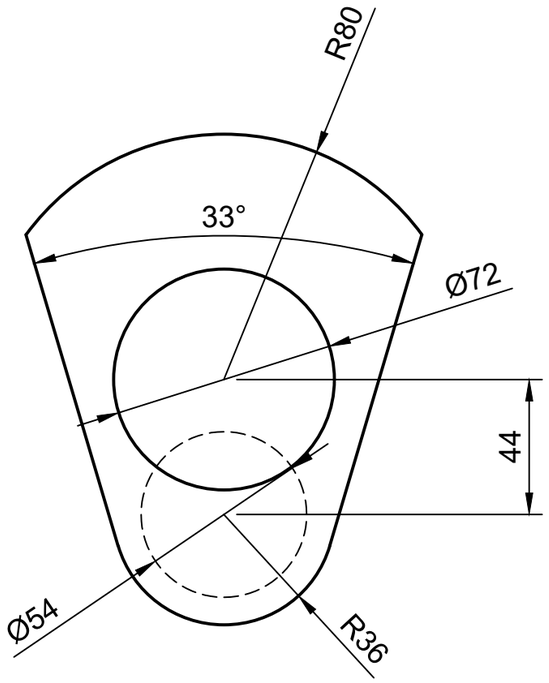

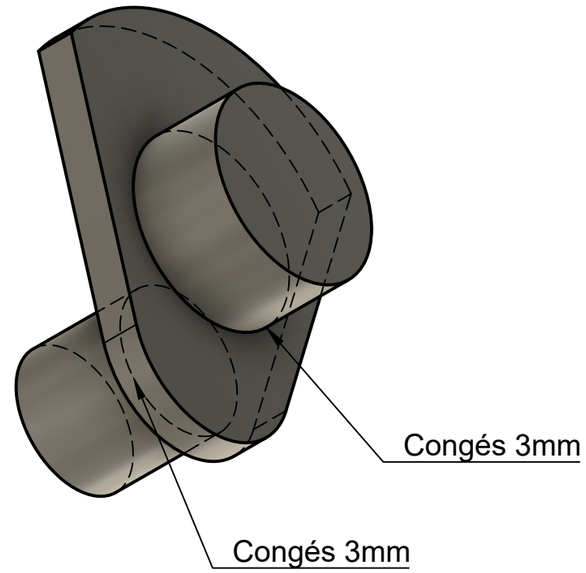

Dept.	Technical reference	Created by	Approved by
		Yannis Lamoussiere 09/12/2024	
		Document type	Document status
		Title: Vilebrequin	DWG No.
			Rev. / Date of issue / Sheet: 1/1