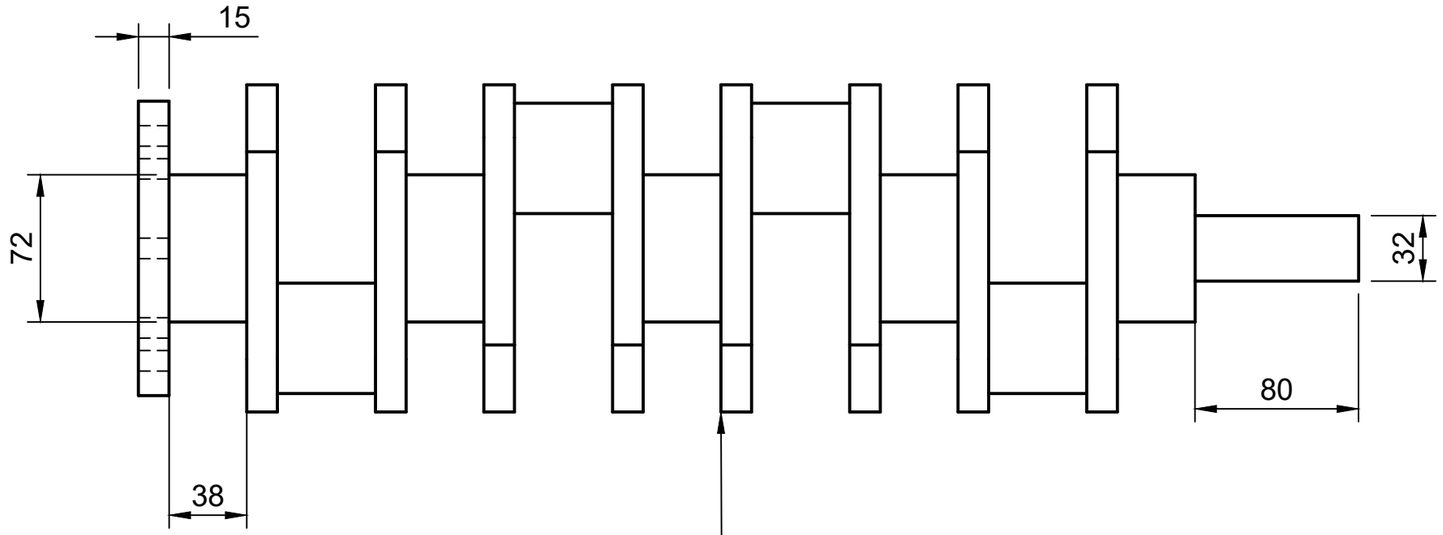

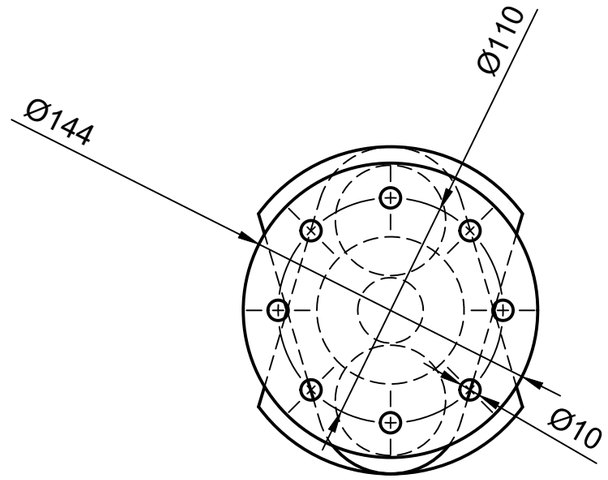

Le vilebrequin complet = 4 copies du 1er pattern + cylindre 38mm à gauche et volant d'inertie (ep = 15mm)

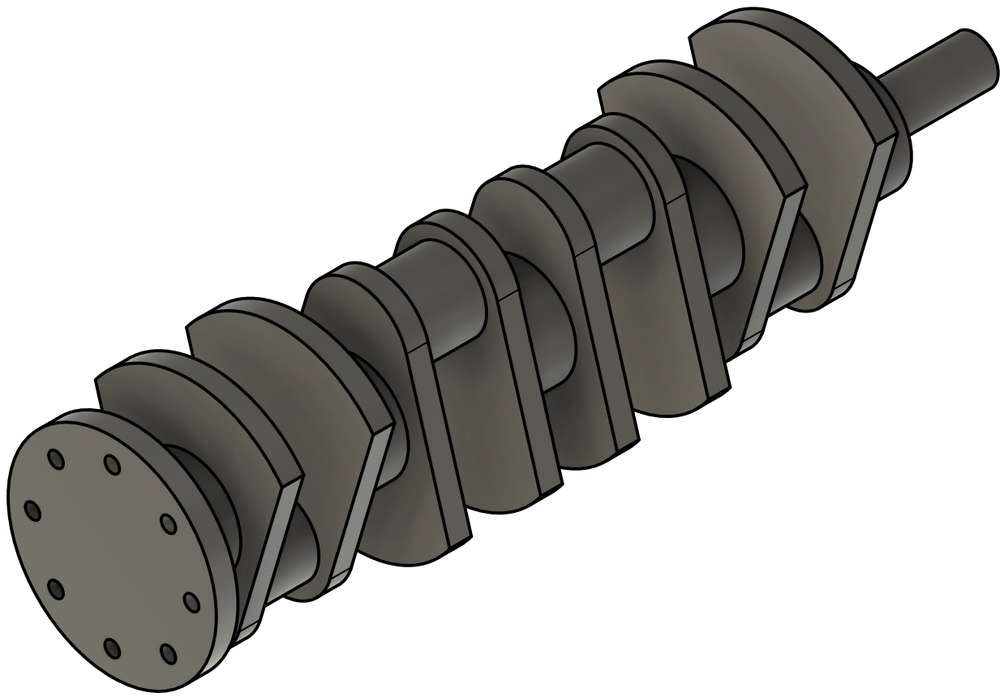

Dept.	Technical reference	Created by	Approved by
		Yannis Lamoussiere 09/12/2024	
		Document type	Document status
		Title: Vilebrequin	DWG No.
			Rev. / Date of issue / Sheet: 1/1