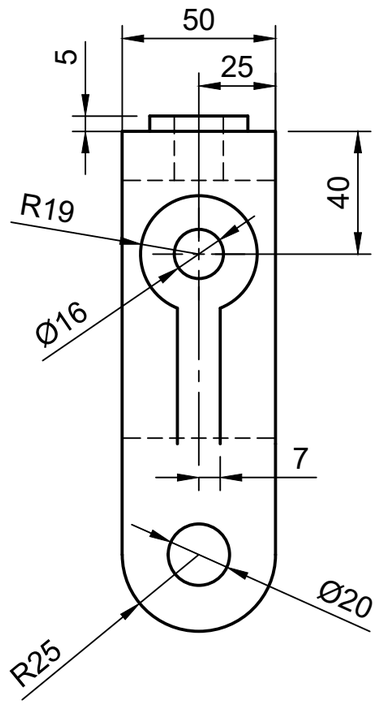

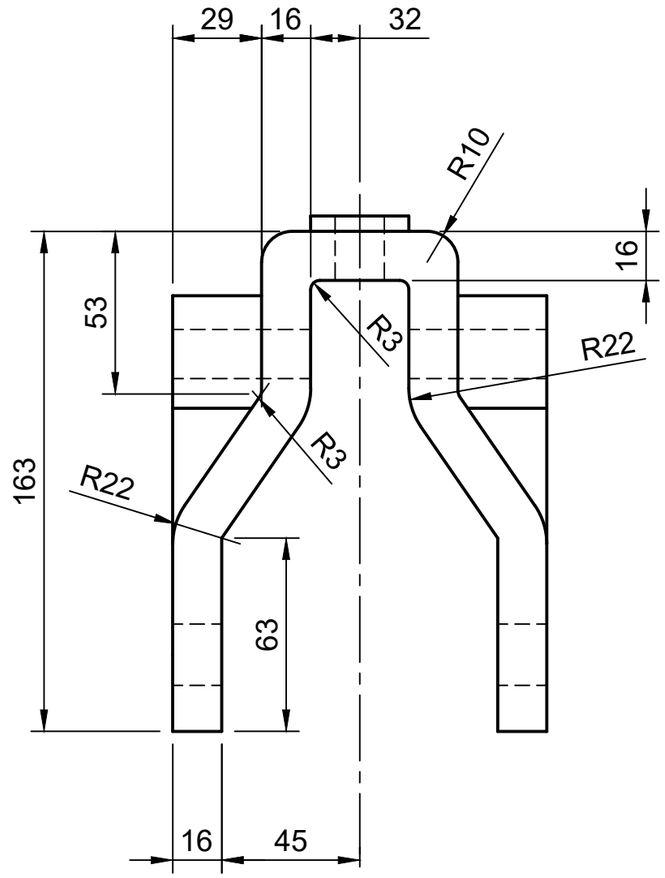

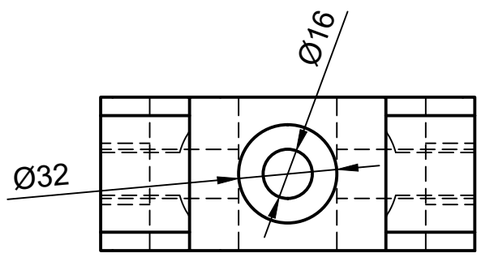

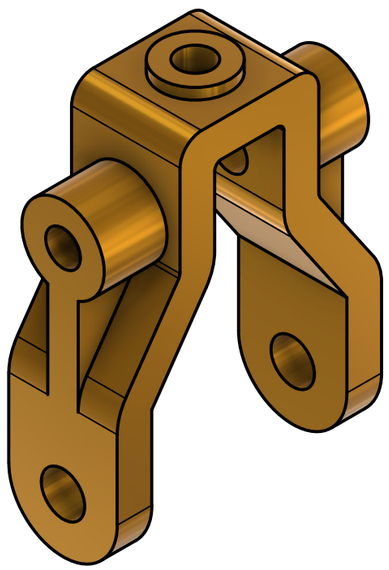

Dept.	Technical reference	Created by Yannis Lamoussiere 03/04/2025	Approved by
		Document type	Document status
		Title Pièce simple (perçage - symétrie)	DWG No.
			Rev. / Date of issue / Sheet 1/1