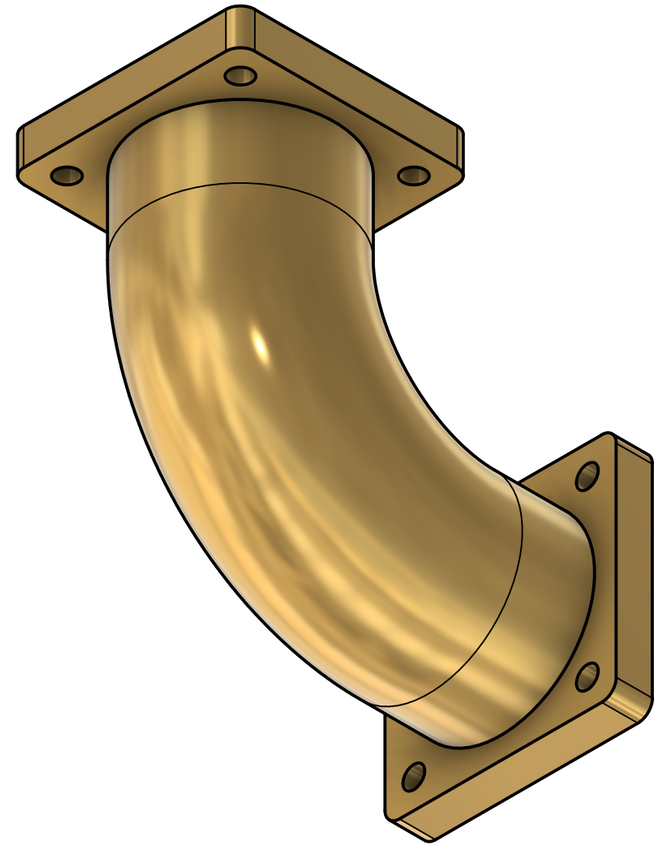

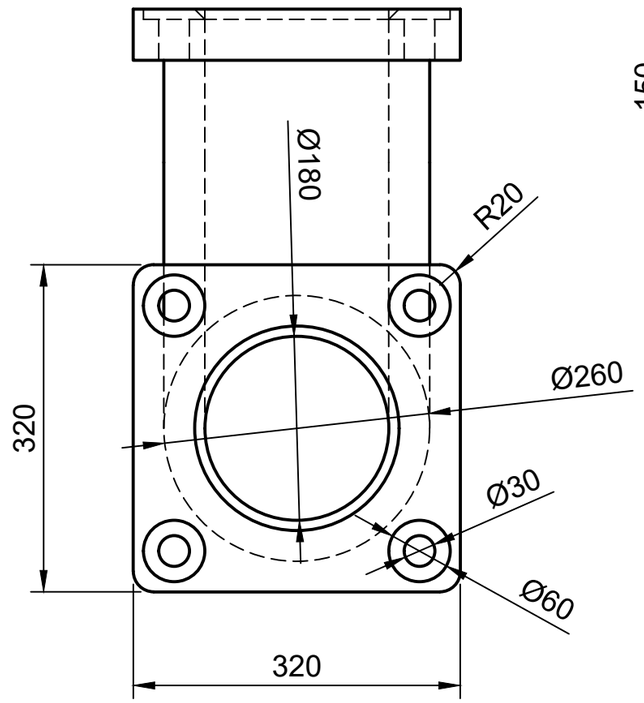

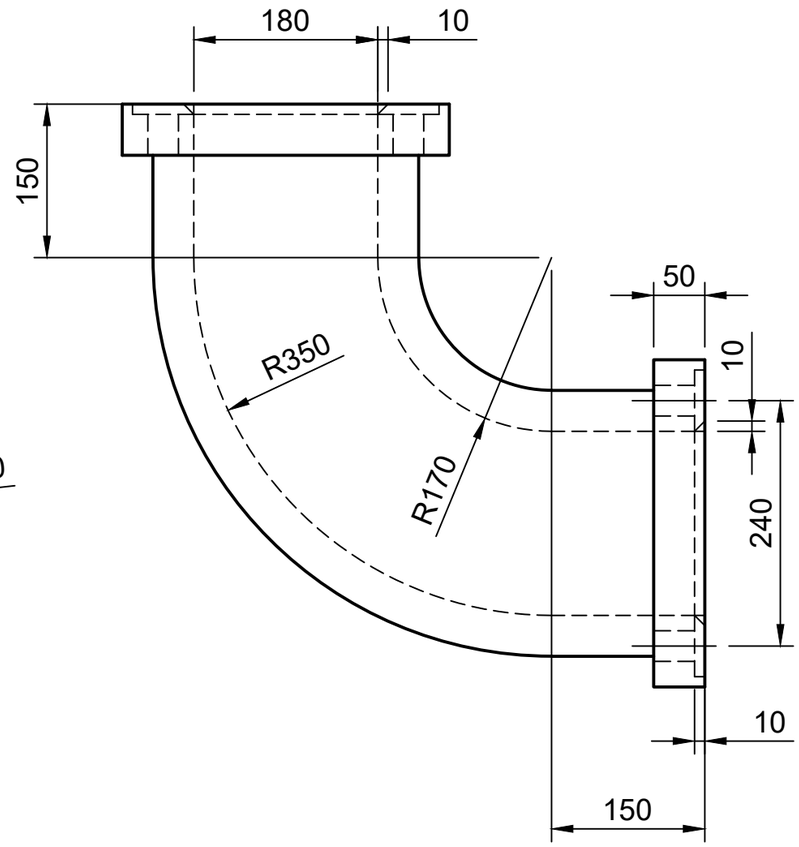

Dept.	Technical reference	Created by	Approved by
		Yannis Lamoussiere 03/03/2025	
		Document type	Document status
		Title: Tuyau paramétrique (Volumique simple, paramètres)	DWG No.
			Rev. / Date of issue / Sheet: 1/1