

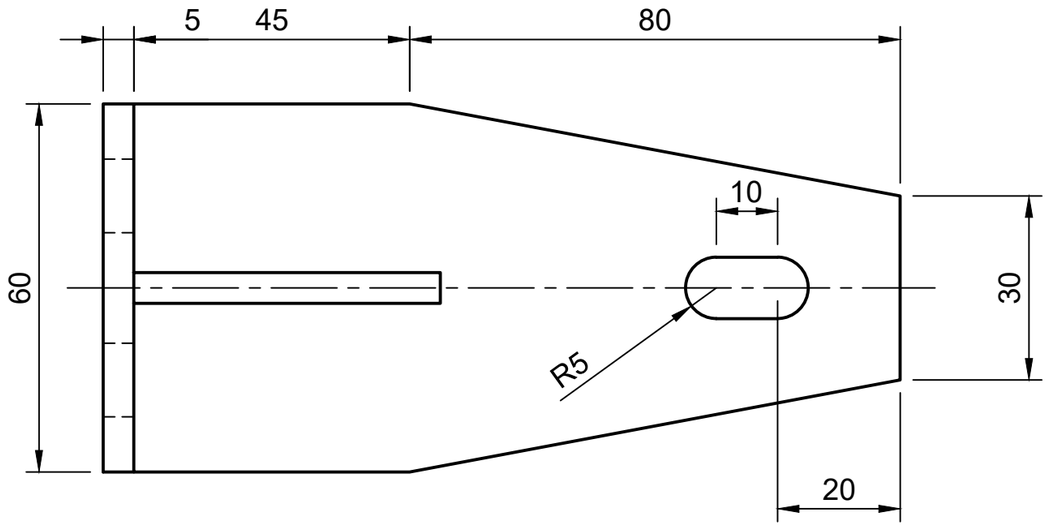

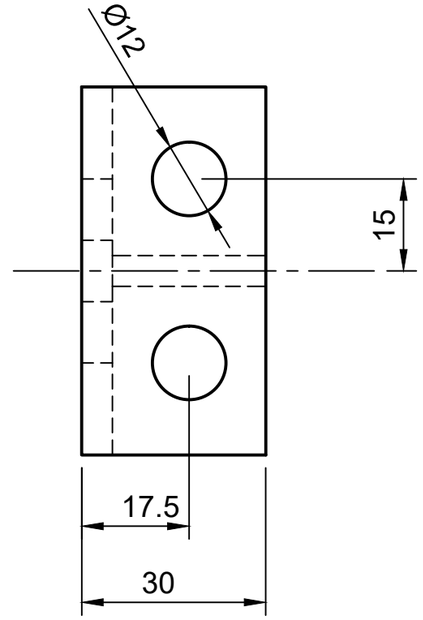

Dept.	Technical reference	Created by	Approved by
		Yannis Lamoussiere 07/10/2024	
		Document type	Document status
		Title: Pièce simple (symétrie - rainure)	DWG No.
			Rev. / Date of issue / Sheet: 1/1